15KS Series - Nema 17 Stepper Motor

BOXER

15KS flip-top peristaltic pump with Nema 17 Stepper Motor.

Technical Data

Flow per Revolution	
ID Ø 1.6 mm	210 / 190 / 170 µl per revolution (3 / 4 / 6 Rollers)
ID Ø 2.4 mm	435 / 390 / 320 µl per revolution (3 / 4 / 6 Rollers)
ID Ø 3.2 mm	730 / 660 / 495 µl per revolution (3 / 4 / 6 Rollers)
ID Ø 4.8 mm	1340 / 1250 / 830 µl per revolution (3 / 4 / 6 Rollers)

Flow at 500 rpm (max recommended speed)	
ID Ø 1.6 mm	105 / 95 / 85 ml/min (3 / 4 / 6 Rollers)
ID Ø 2.4 mm	217 / 195 / 160 ml/min (3 / 4 / 6 Rollers)
ID Ø 3.2 mm	365 / 330 / 257 ml/min (3 / 4 / 6 Rollers)
ID Ø 4.8 mm	670 / 625 / 415 ml/min (3 / 4 / 6 Rollers)

Power Consumption (including A2 driver)	7.0 to 12.0 W

Tubing	
Material	Pharm-a-line / Silicone / Lagoprene / ED-Plex
ID Ø range	ID Ø 1.6 to 4.8 mm
Wall thickness	1.6 mm

General Data	
Max pressure	2.0 bar
Max suction height (dry)	9.0 m H_2O
Motor life	>10000 hour
Weight (without driver)	655 g

Available Configurations
Stepper motor (without driver)
Stepper motor with analogue driver (A2) , 0 to 5V speed input

All data measured with 'run-in' Pharm-a-line tubing and H_2O.

Motor Details

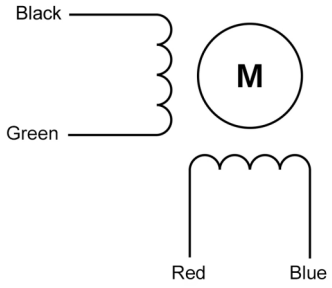

Specification	
Type	2 phase, hybrid, bipolar
Size	Nema 17 / 42 mm
Step Angle	1.8 ° (200 steps per revolution)
Voltage	24 V
Phase 1 / Phase 2	Black - Green / Red - Blue (see diagram above)
Ambient temperature range	-20 to +50 °C
Max temperature rise	80 °C
Insulation resistance	100 MΩ
Insulation class	B
Rated current	0.86 A
Resistance per phase	4.94 Ω ±10%
Inductance per phase	11.45 mH ±20%
Wire gauge	26 AWG
Lead length	300 mm
Available drivers	→ Drivers
Recommended driver rating	2 A
	A current limiter should be used for low speed operation to avoid excessive motor temperatures

Tube Loading / Unloading

The 15KS peristaltic pump is a flip-top design. The loading and unloading of the tube is through operation of the lever:

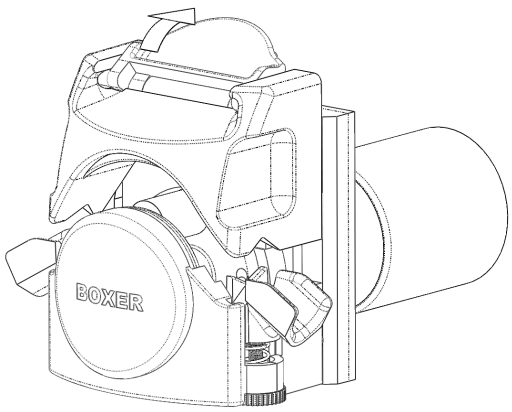

The tube grips are sprung loaded and adjust automatically to the OD of the tube. The 15KS is designed for 1.6 mm wall tubing from ID of 1.6 to 4.8 mm. Only tubing suitable for peristaltic pumps should be used.

Removal / Assembly of Pump Head

The 15KS peristaltic pump is designed with a bayonet style head assembly onto the motor plate.

❶ Open the tube clamp lever completely.

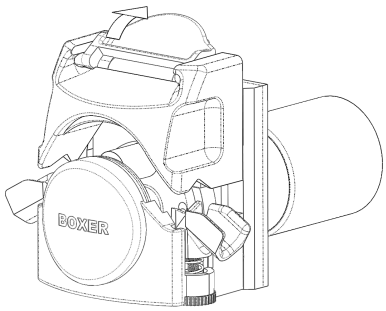

❷ Remove the M3x12mm screw. Close clamp lever.

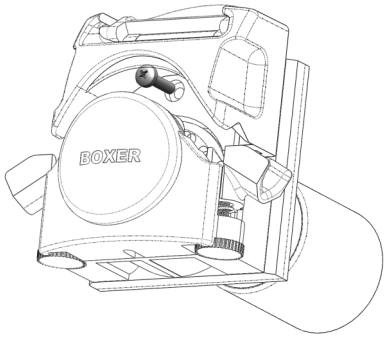

❸ Push head lock lever in direction on the motor. Rotate the head anti clockwise.

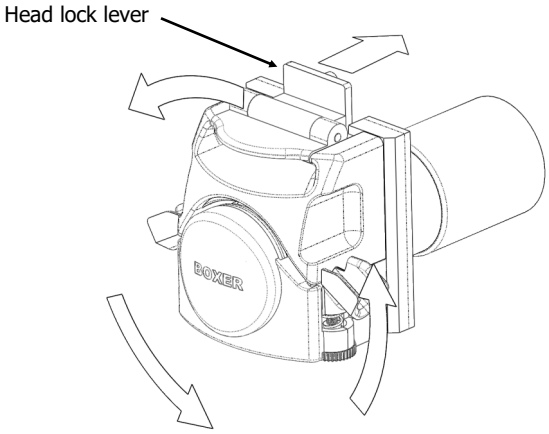

❹ Pull the head assembly away from the motor plate.

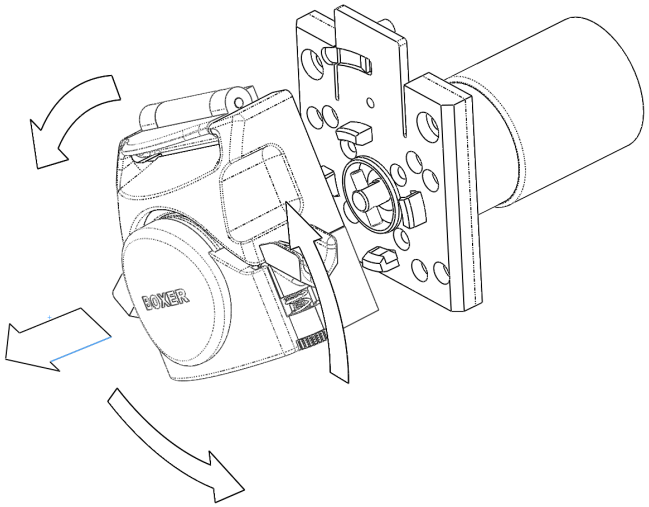

❺ To re-assemble: open tube clamp lever. Align head with motor plate at the angle shown below. Rotate pump rotor until the rotor is aligned with drive pin. Push head into bayonet.

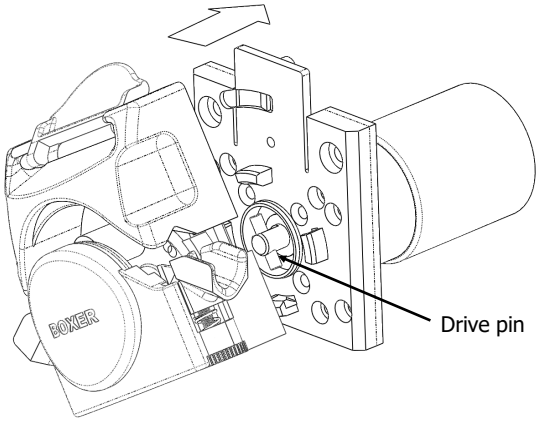

❺ Rotate head assembly clockwise until 'clicks' into position. Replace M3x12mm screw. Close tube clamp lever.

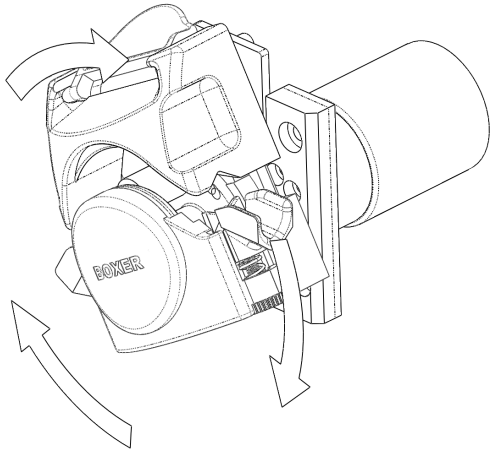

Assembly Information

The 15KS peristaltic pump with Nema 17 stepper motor is assembled to a panel cut-out using 2 x M4 bolts and 2 x M3 bolts. To access the mounting holes the head assembly should be removed following the instructions on the previous page.

The mounting plate is designed for several different motors. The mounting gasket should be placed between the motor plate and panel.

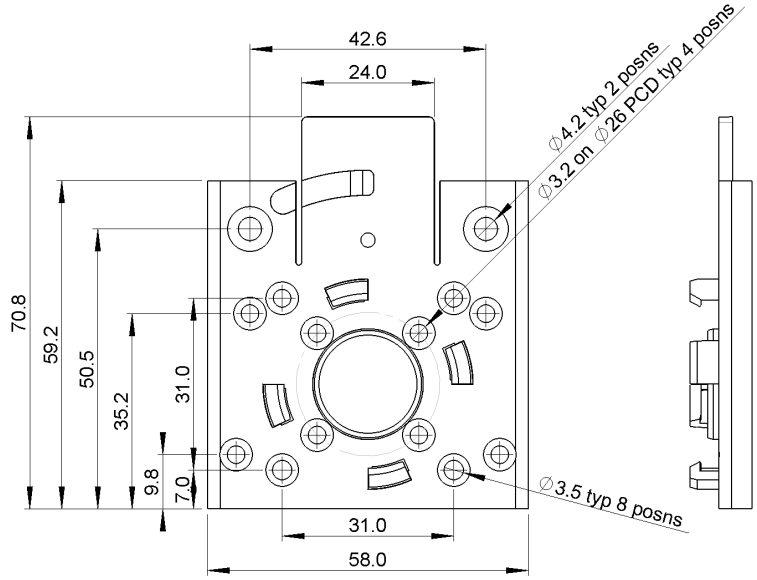

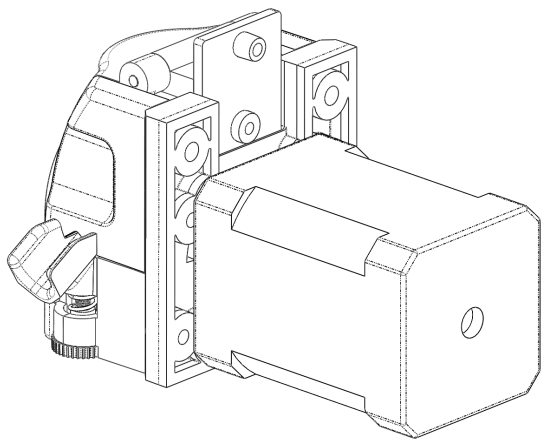

Recommended panel cut-out:

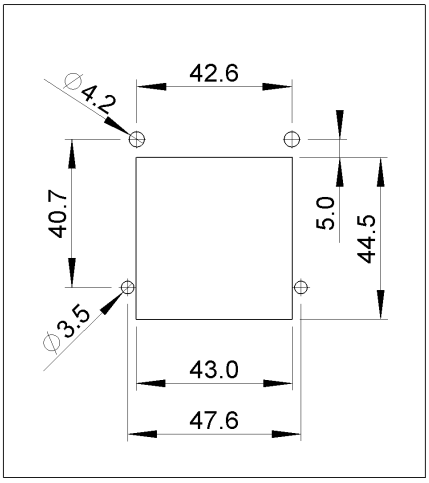

15KS with Stepper Motor (without driver)

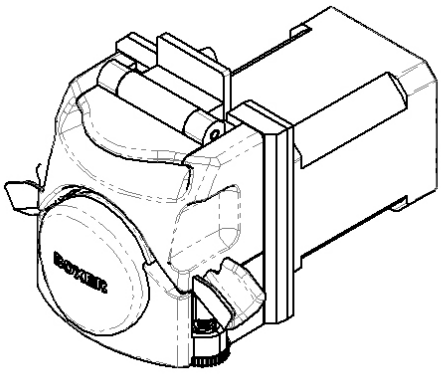

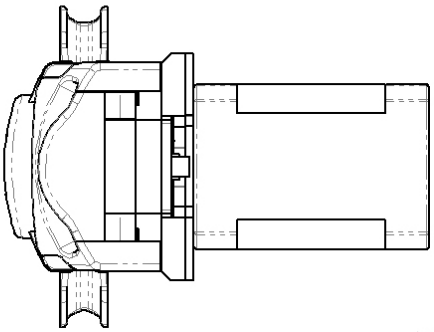

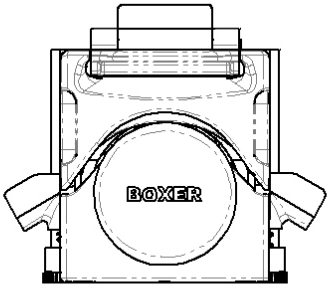

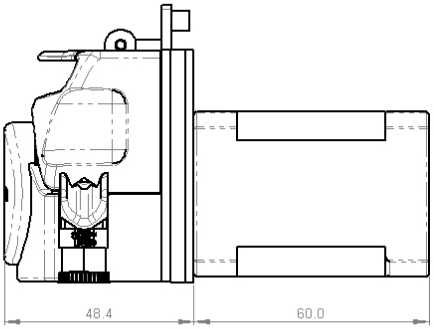

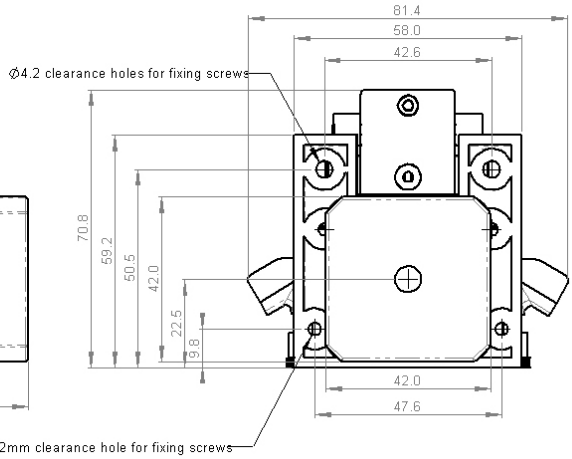

Links to Drawing and STEP file:
→ Drawing (.png)
→ STEP (.zip)

Order Information

Part Number	Description
15601.100	15KS 24 V Stepper / 3 Rollers
15602.100	15KS 24 V Stepper / 4 Rollers
15603.100	15KS 24 V Stepper / 6 Rollers

Please enquire for part numbers of other configurations.

BOX-it (Webshop)

Sample quantities are available for direct online purchase:

→ BOX-it

15KS with Stepper Motor with A2 Analogue Driver, 0 to 5 V Speed Input

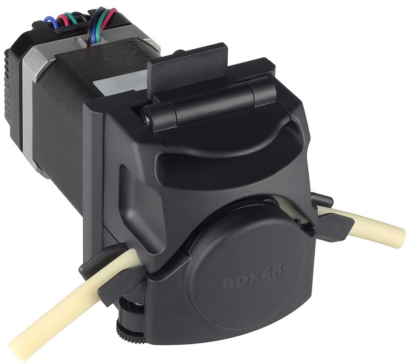

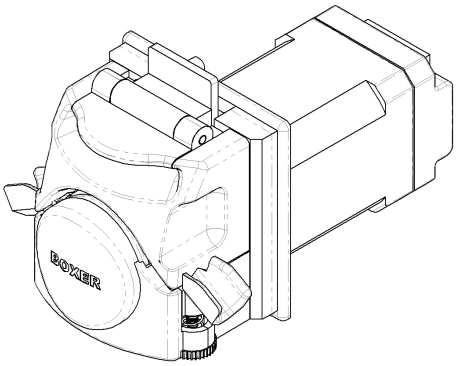

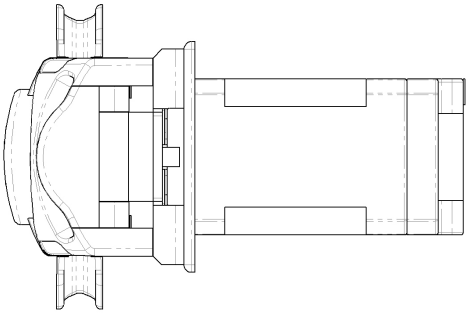

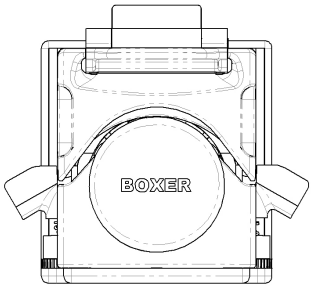

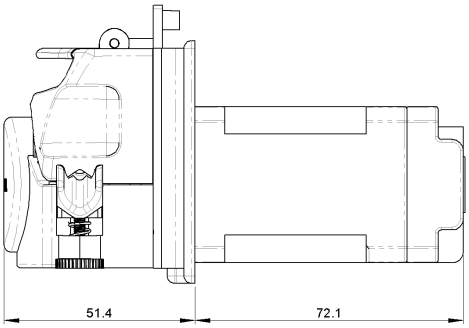

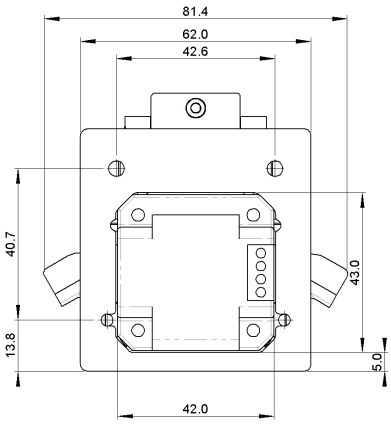

Link to driver information:
→ Drivers webpage
→ Drivers datasheet (.pdf)

Links to Drawing and STEP file:
→ Drawing (.png)
→ STEP (.zip)

Order Information

Part Number	Description
15651.101	15KS 24 V Stepper / 3 Rollers / A2 Driver
15652.101	15KS 24 V Stepper / 4 Rollers / A2 Driver
15653.101	15KS 24 V Stepper / 6 Rollers / A2 Driver

Please enquire for part numbers of other configurations.

BOX-it (Webshop)

Sample quantities are available for direct online purchase:

→ BOX-it

Tube Sets / Tube Lengths

Tubing should always be ordered separately. Listed here is **Pharm-a-line** (PHI) tubing in 150 mm single lengths, 1m (or multiples of) lengths or 15 m coils:

Part Number	Description
15000.019	Tube length PHI ID Ø 1.6 mm x 150 mm
15000.020	Tube length PHI ID Ø 2.4 mm x 150 mm
15000.021	Tube length PHI ID Ø 3.2 mm x 150 mm
15000.048	Tube length PHI ID Ø 4.8 mm x 150 mm
15000.210	Tube length PHI ID Ø 1.6 mm x 1 m
15000.211	Tube length PHI ID Ø 2.4 mm x 1 m
15000.212	Tube length PHI ID Ø 3.2 mm x 1 m
15000.213	Tube length PHI ID Ø 4.8 mm x 1 m
81616.115	Tube length PHI ID Ø 1.6 mm x 15 m
82416.115	Tube length PHI ID Ø 2.4 mm x 15 m
83216.115	Tube length PHI ID Ø 3.2 mm x 15 m
84816.115	Tube length PHI ID Ø 4.8 mm x 15 m

Technical information including chemical compatibility:

→ Pharm-a-line

Alternative tubing (**Silicone**, **Lagoprene** and **ED-Plex**):

→ 15KS Tubing

Additional Information (Links):

→ 15KS Webpage

→ Boxer peristaltic pump overview

All data is representative for initial selection purposes. It is the responsibility of the user to determine suitability for the intended use. Technical changes reserved. These peristaltic pumps are not suitable for in-vivo applications.

BOXER

info@boxerpumps.com
www.boxerpumps.com